PA 4 - PA 4+ Wiring Code

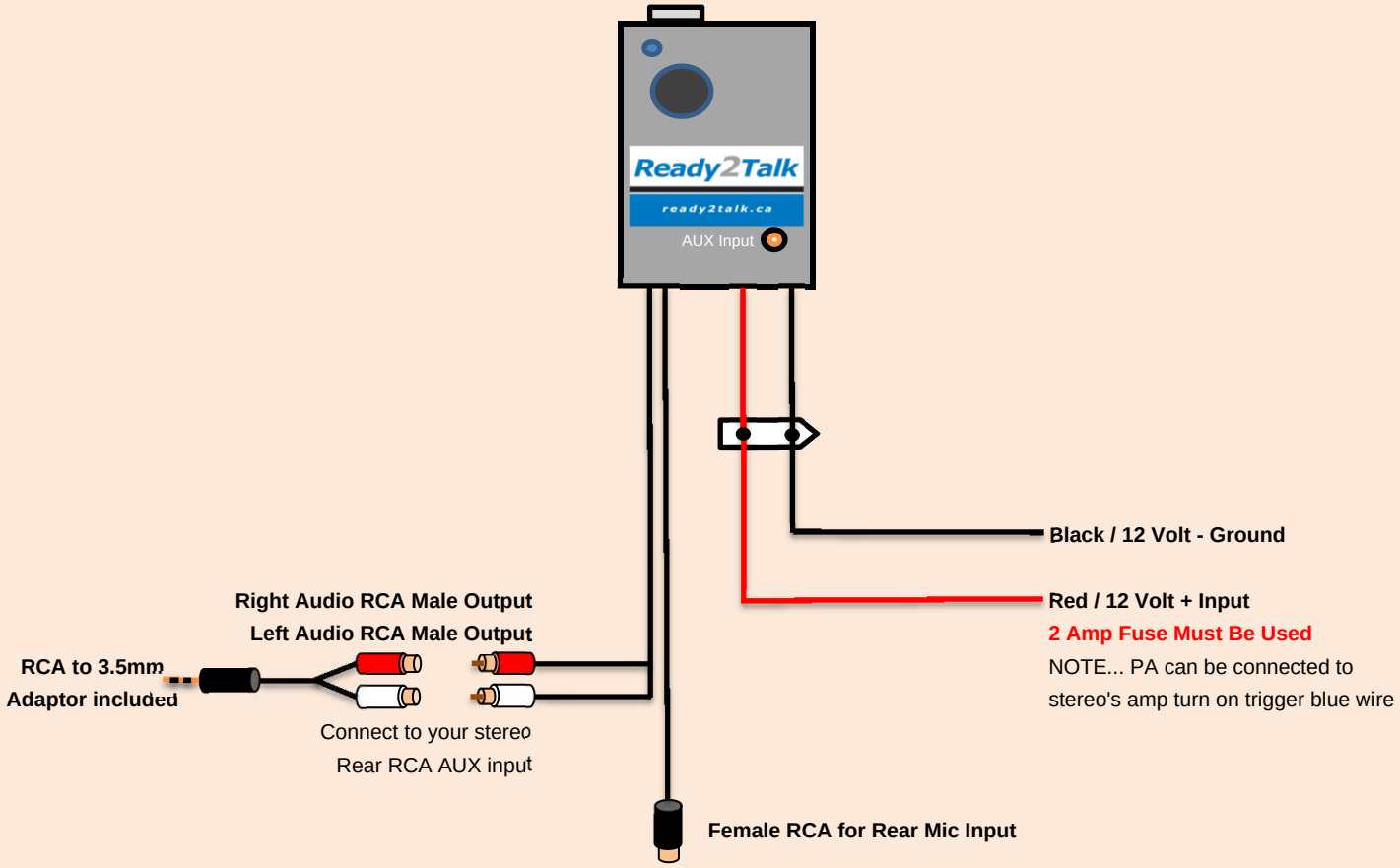
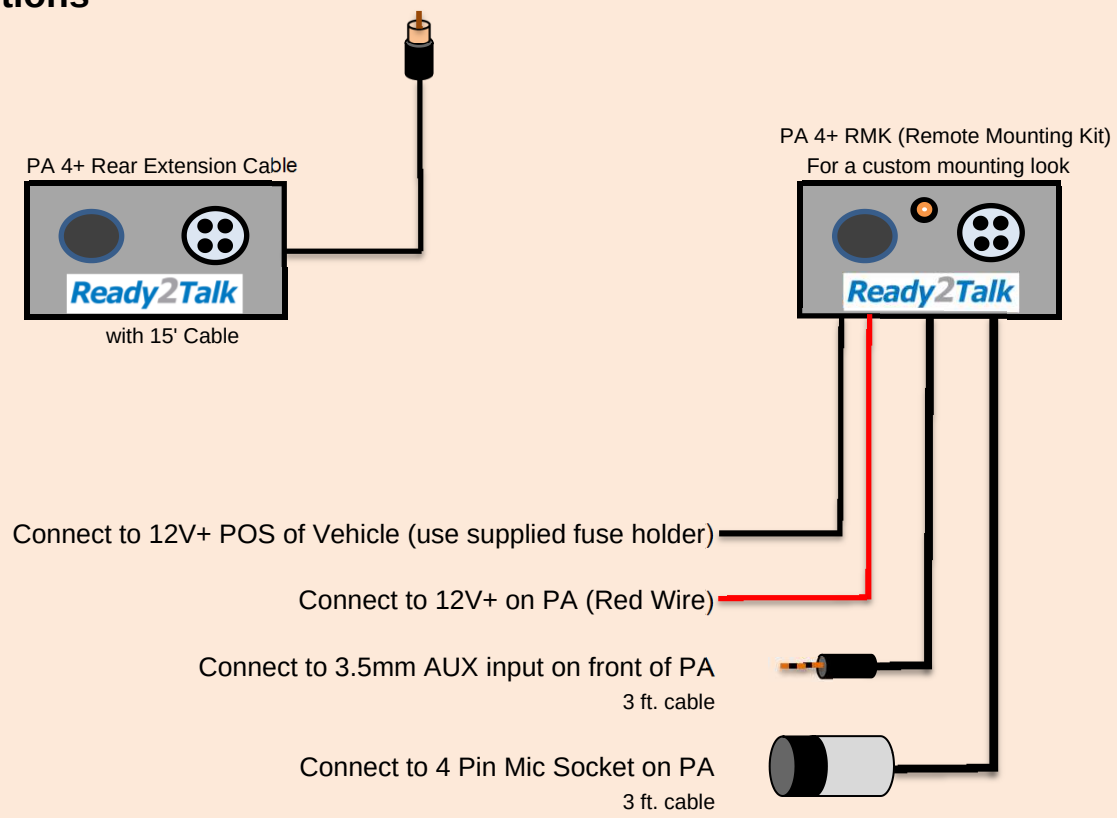
Available Options